REV	DATE	DESCRIPTION
--	20/03/08	ISSUED FOR INFORMATION

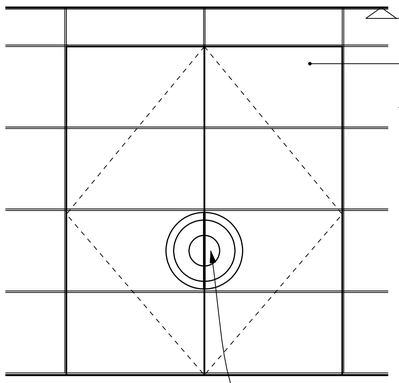

01 ELEVATION OF DOUBLE DOORS/ ROOM SIDE
-- 1:20@A1

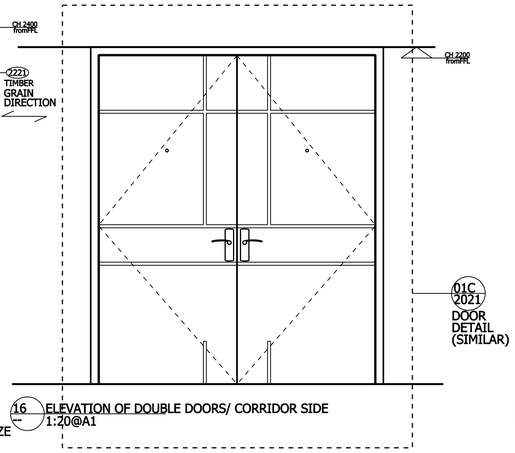

16 ELEVATION OF DOUBLE DOORS/ CORRIDOR SIDE
-- 1:20@A1

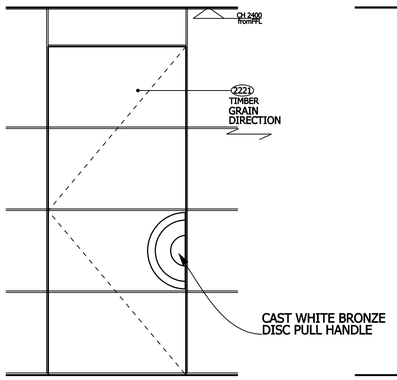

02 ELEVATION OF WC DOOR
-- 1:20@A1

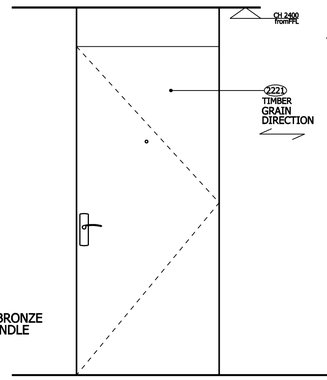

03 ELEVATION OF SINGLE DOOR/ ROOM SIDE
-- 1:20@A1

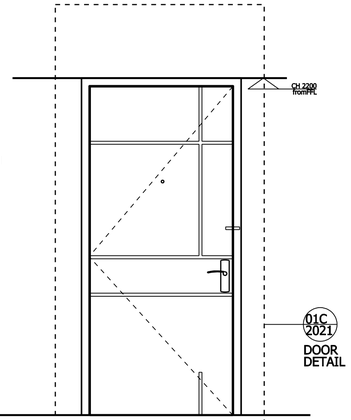

04 ELEVATION OF SINGLE DOOR/ CORRIDOR SIDE
-- 1:20@A1

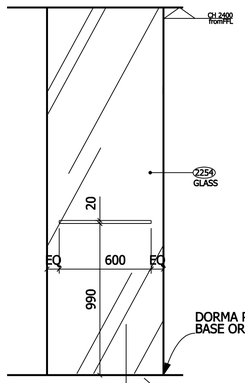

05 ELEVATION OF SHOWER DOOR
-- 1:20@A1

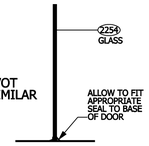

17 SECTION THROUGH BATH DOOR
-- 1:10@A1

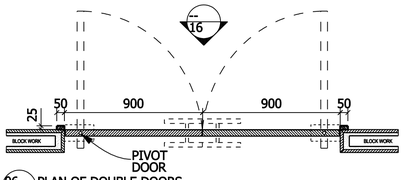

06 PLAN OF DOUBLE DOORS
-- 1:20@A1

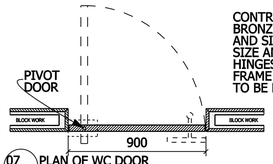

CONTRACTOR TO FIT DOOR HARDWARE, BRONZE FINISH SUITABLE QUANTITY AND SIZE TO BE APPROPRIATE FOR SIZE AND WEIGHT OF DOOR. HINGES TO BE RECESSED INTO FRAME AND DOOR END, NOT TO BE EXPOSED ON PUBLIC SIDE

07 PLAN OF WC DOOR
-- 1:20@A1

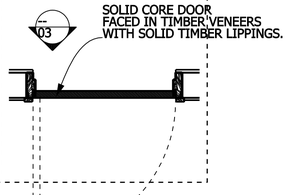

07 PLAN OF SINGLE DOOR
-- 1:20@A1

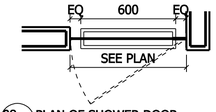

08 PLAN OF SHOWER DOOR
-- 1:20@A1

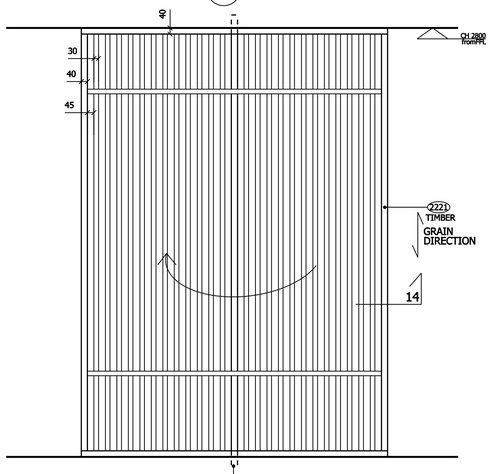

09 ELEVATION OF REVOLVING TIMBER SCREEN
-- 1:20@A1

SUITABLE CENTRAL PIVOT FLOOR SPRING WITH HOLD OPEN AT A SUITABLE ANGLE TO BE DETERMINED ON SITE

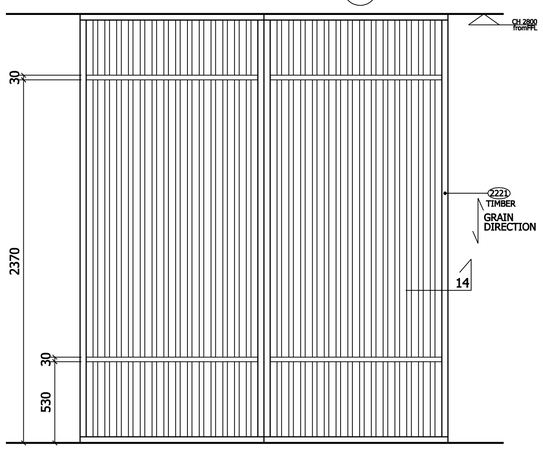

10 ELEVATION OF TIMBER SCREENS
-- 1:20@A1

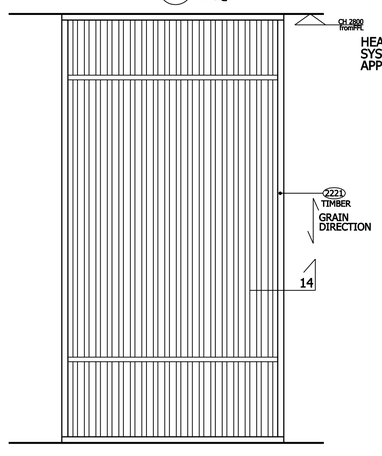

11 ELEVATION OF TIMBER SCREENS
-- 1:20@A1

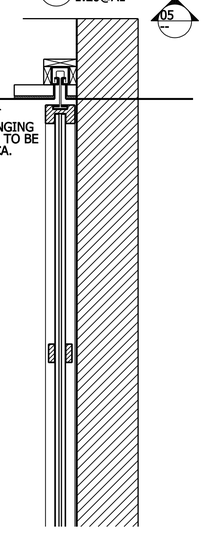

15 SECTION THROUGH SCREEN
-- 1:5@A1

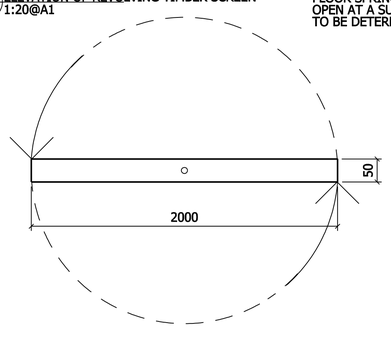

12 PLAN OF REVOLVING TIMBER SCREEN
-- 1:20@A1

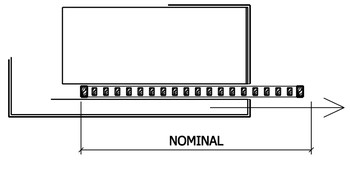

13 PLAN OF TIMBER SCREENS
-- 1:20@A1

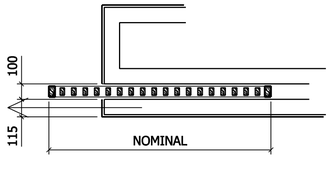

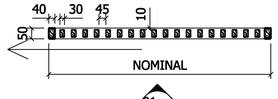

14 PLAN OF TIMBER SCREENS
-- 1:20@A1

PRELIMINARY

INTERNATIONAL
www.kca-int.com

CLIENT
北京金茂置业有限公司
BEIJING JINMAO REAL ESTATE CO.,LTD".

PROJECT
JIN MAO WESTIN
No. 1-3 XIN YUAN LI ROAD
CHAOYANG DISTRICT
BEIJING
PROJECT NO. 448

DESCRIPTION
AREA 22
PRESIDENTIAL SUITE
DOOR DETAIL

SCALE	DATE	DRAWN BY
A/S@A1	17/03/08	BL

WORK TO FIGURED DIMENSIONS
DO NOT SCALE THIS DWG
CHECK DIMENSIONS ON SITE
BEFORE COMMENCING WORK

©

KCA 448 22 21